ASSEMBLY INSTRUCTION
CP1801-A-1643

A x10
Spec:3.8*L16

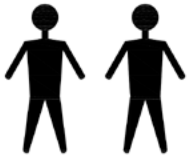

FIG. 1

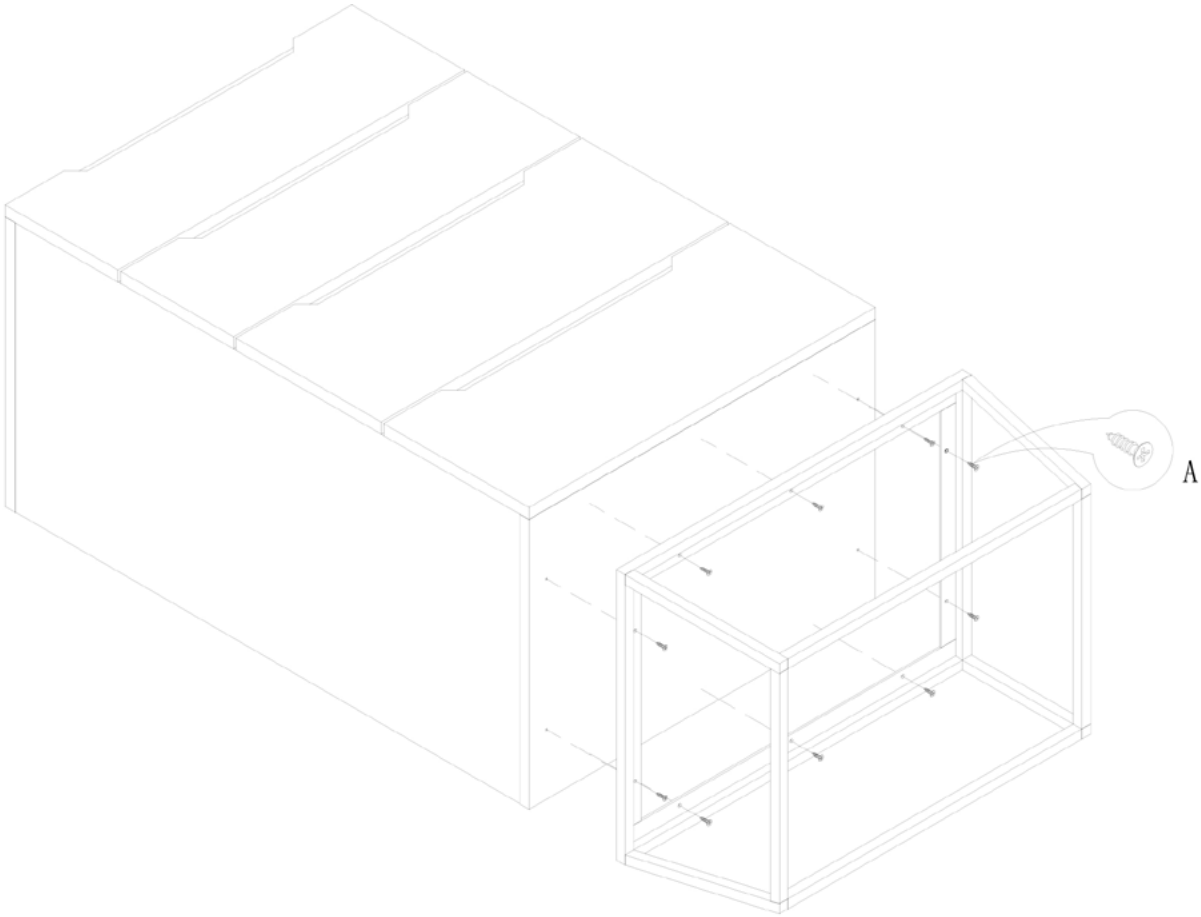
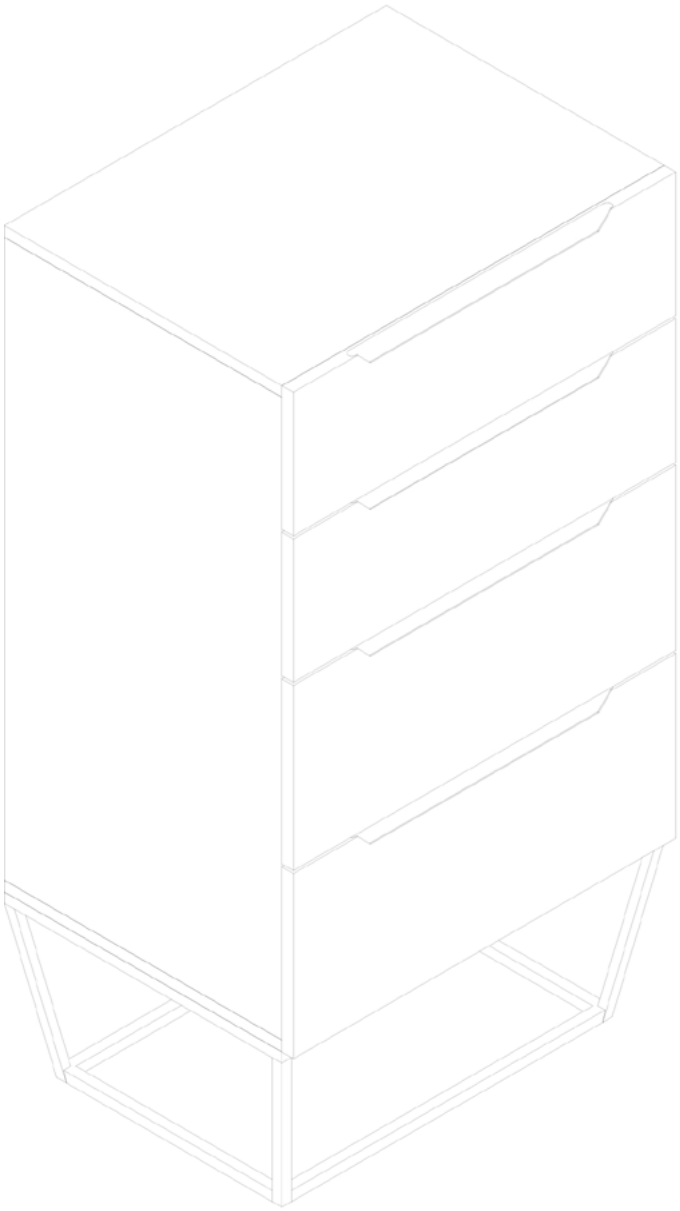
FIG. 2